CDP-791/X111ES

SERVICE MANUAL

US Model
Canadian Model
CDP-X111ES

AEP Model
UK Model
CDP-791

Photo: CDP-791

SPECIFICATIONS

Model Name Using Similar Mechanism	CDP-291/391
CD Mechanism Type	CDM14-5BD1
Optcal Pick-Up Block Type	BU-5BD1

Compact disc player

Frequency response	2 Hz – 20 kHz ± 0.5 dB
Signal-to-noise ratio	More than 108 dB
Dynamic range	More than 98 dB
Harmonic distortion	Less than 0.0027%
Channel separation	More than 100 dB

Outputs

LINE OUT (FIXED) (phono jacks)	Output level 2 V (at 50 kilohms) Load impedance over 10 kilohms
LINE OUT (VARIABLE) (phono jacks)	Output level max. 2 V (at 50 kilohms) Load impedance over 50 kilohms
DIGITAL OUT (OPTICAL) (optical output connector)	Wave length 660 nm Output level −18 dBm
PHONES (stereo phone jack)	Output level max. 10 mW Load impedance 32 ohms

General

Power requirements	**US, Canadian Model:** 120 V AC, 60 Hz **AEP Model:** 220 V − 230 V AC, 50/60 Hz **UK Model:** 240 V AC, 50 Hz
Power consumption	12 W
Dimensions (approx., including projections)	430×110×280 mm (w/h/d) (17×4 3/4×11 1/8 inches)
Weight (approx.)	4.0 kg (8 lbs 14 oz)

Supplied accessories

Audio cord	1 (2 phono plugs – 2 phono plugs)
Remote commander	1
R6 (AA) batteries	2

Remote commander RM-D791

Remote control system	Infrared control
Power requirements	3 V DC with two R6 (size AA) batteries
Dimensions	Approx. 62×20×175 mm (w/h/d) (1 5/8×13/16×7 inches)
Weight	Approx. 130 g (4.6 oz) Including batteries

Design and specifications subject to change without notice.

MICROFILM

COMPACT DISC PLAYER

SONY®

SAFETY CHECK-OUT

After correcting the original service problem, perform the following safety check before releasing the set to the customer:
Check the antenna terminals, metal trim, "metallized" knobs, screws, and all other exposed metal parts for AC leakage. Check leakage as described below.

LEAKAGE TEST

The AC leakage from any exposed metal part to earth ground and from all exposed metal parts to any exposed metal part having a return to chassis, must not exceed 0.5 mA (500 microampers). Leakage current can be measured by any one of three methods.

1. A commercial leakage tester, such as the Simpson 229 or RCA WT-540A. Follow the manufacturers' instructions to use these instruments.
2. A battery-operated AC milliammeter. The Data Precision 245 digital multimeter is suitable for this job.
3. Measuring the voltage drop across a resistor by means of a VOM or battery-operated AC voltmeter. The "limit" indication is 0.75 V, so analog meters must have an accurate low-voltage scale. The Simpson 250 and Sanwa SH-63Trd are examples of a passive VOM that is suitable. Nearly all battery operated digital multimeters that have a 2 V AC range are suitable. (See Fig. A)

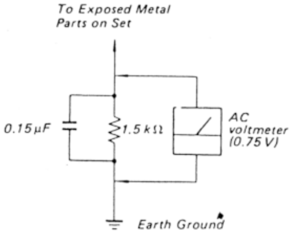

Fig. A. Using an AC voltmeter to check AC leakage.

SAFETY-RELATED COMPONENT WARNING!!

COMPONENTS IDENTIFIED BY MARK ⚠ OR DOTTED LINE WITH MARK ⚠ ON THE SCHEMATIC DIAGRAMS AND IN THE PARTS LIST ARE CRITICAL TO SAFE OPERATION. REPLACE THESE COMPONENTS WITH SONY PARTS WHOSE PART NUMBERS APPEAR AS SHOWN IN THIS MANUAL OR IN SUPPLEMENTS PUBLISHED BY SONY.

MODEL IDENTIFICATION

—Model Number Label—

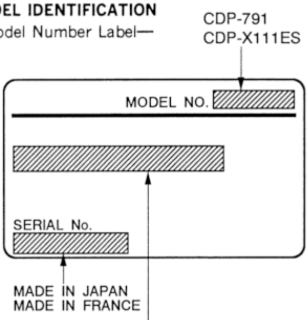

US Model:	AC120V 60Hz 12W
Canadian Model:	AC: 120V 60 Hz 12W
AEP Model:	AC220 – 230V, 50/60Hz
UK Model:	AC240V~50/ 60Hz

TABLE OF CONTENTS

Section *Title* *Page*

Specifications 1
Safety Check-out 2
Model Identification 2

1. GENERAL
Notes on Handling the Optical Pick-up Block or Base Unit 3
Notes on Laser Diode Emission Check 3
Location of Controls 3
Adjusting Operating Voltage 3

2. DISASSEMBLY 4

3. ELECTRICAL BLOCK CHECKING
S Curve Check 5
RF Level Check 5
E-F Balance Check 5
RF PLL Free-run Frequency Check 6
Focus/Tracking Gain 6

4. DIAGRAMS
IC101(CXA1372Q)PIN DESCRIPTIONS 7
4-1. Block Diagram 8
4-2. Printed Wiring Boards 12
4-3. Schematic Diagram 15

5. EXPLODED VIEWS 21

6. ELECTRICAL PARTS LIST 24

ATTENTION AU COMPOSANT AYANT RAPPORT À LA SÉCURITÉ!

LES COMPOSANTS IDENTIFIÉS PAR UNE MARQUE ⚠ SUR LES DIAGRAMMES SCHÉMATIQUES ET LA LISTE DES PIÈCES SONT CRITIQUES POUR LA SÉCURITÉ DE FONCTIONNEMENT. NE REMPLACER CES COMPOSANTS QUE PAR DES PIÈCES SONY DONT LES NUMÉROS SONT DONNÉS DANS CE MANUEL OU DANS LES SUPPLÉMENTS PUBLIÉS PAR SONY.

NOTES ON HANDLING THE OPTICAL PICK-UP BLOCK OR BASE UNIT

The laser diode in the optical pick-up block may suffer electrostatic breakdown because of the potential diference generated by the charged electrostatic load, etc. on clothing and the human body.
During repair, pay attention to electrostatic breakdown and also use the procedure in the printed matter which is included in the repair parts.
The flexible board is easily damaged and should be handled with care.

NOTES ON LASER DIODE EMISSION CHECK

The laser beam on this model is concentrated so as to be focused on the disc reflective surface by the objective lens in the optical pick-up block. Therefore, when checking the laser diode emission, observe from more than 30cm away from the objective lens.

For UK Model and AEP Model

CLASS 1 LASER PRODUCT
LUOKAN 1 LASERLAITE
KLASS 1 LASERAPPARAT

This Compact Disc player is classified as a CLASS 1 LASER product.
The CLASS 1 LASER PRODUCT label is located on the rear exterior.

Adjusting Operating Voltage

For the customers of the model equipped with the voltage selector
Check that the voltage selector is set to the local power line voltage. If not, set the selector to the correct position before connecting AC power cord to a wall outlet.

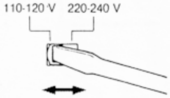

This section is extracted from instruction manual.

SECTION 1
GENERAL

Location of Controls

Front Panel

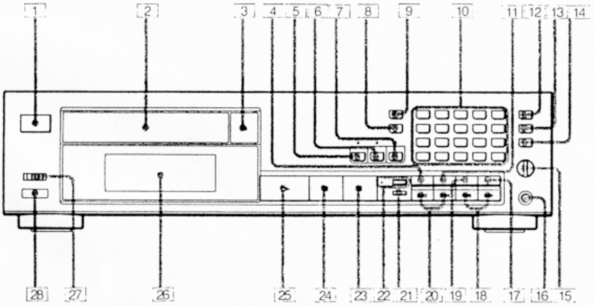

1 POWER switch (18)
2 Disc tray (19)
3 ⏏ OPEN/CLOSE button (18)
4 PEAK SEARCH button (64)
5 CONTINUE button and indicator (30), (40), (44), (52), (68)
6 SHUFFLE button and indicator (30)
7 PROGRAM button and indicator (40), (44)
8 TIME SET button (56), (60)
9 EDIT/TIME FADE button (54), (60)
10 Numeric buttons (22)
11 REPEAT button (36)
12 >20 (over 20) button (22)
13 CHECK (program check) button (42), (50)
14 CLEAR (program clear) button (28), (42), (50)
15 LINE OUT/PHONE LEVEL control (20)
16 PHONES jack
17 MUSIC SCAN button (32)
18 ◀◀ ▶▶ (manual search) buttons (24), (60)
19 FADER button (60) (62)
20 |◀◀ ▶▶| (AMS*) buttons (22), (45)
21 TIME button (22)
22 A. SPACE (auto space)/A. CUE(auto cue) button and auto cue indicator (28), (62)
23 ■ (stop) button (20)
24 ❚❚ (pause) button (20)
25 ▶ (play) button (20)
26 Display window
27 TIMER switch (66)
28 Remote sensor (16)

Remote commander

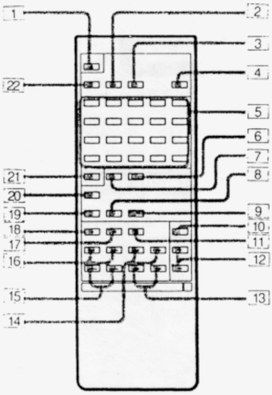

[1] ⏏ OPEN/CLOSE button ⓲
[2] SHUFFLE button ㉚
[3] PROGRAM button ㊵, ㊹
[4] M.SCAN (music scan) button ㉜
[5] Numeric buttons ㉒
[6] CLEAR (program clear) button ㉘, ㊷, ㊿
[7] CHECK button ㊷, ㊿
[8] A ←→ B repeat button ㊳
[9] A.SPACE (auto space)/A.CUE (auto cue) button ㉘, (62)
[10] FADER button (60), (62)
[11] ■ (stop) button ⑳
[12] LINE OUT LEVEL +/− (line out/headphone volume) buttons ⑳
[13] ◀◀ ▶▶ SLOW (low speed manual search) buttons ㉔
[14] ◀◀ ▶▶ (manual search) buttons ㉔, (60)
[15] ⌞ ⌟ INDEX buttons ㉔
[16] |◀◀ ▶▶| AMS buttons ㉒, ㊺
[17] ❚❚ (pause) button ⑳
[18] ▶ (play) button ⑳
[19] CLEAR/REPEAT (A ←→ B repeat clear/repeat) button ㊳
[20] TIME button ㉒
[21] 20 (over 20) button ㉒
[22] CONTINUE button ㉚, ㊵, ㊹, (52), (58)

SECTION 2
DISASSEMBLY

BASE UNIT REMOVAL

Note: Follow the disassembly procedure in the numerical order given.

1. Remove CD mechanism from the set and turn over.
2. Turn the cam ❶ in the Arrow Ⓐ direction by the ⊖ driver.
3. Take out disc table ❷.
4. Remove bracket yoke ❸.
5. Remove BU-5BD1 ❹ in the Arrow ❹ direction.

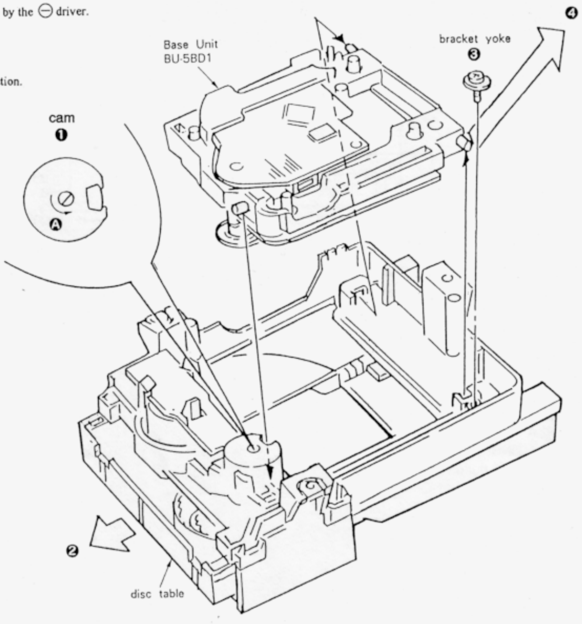

SECTION 3
ELECTRICAL BLOCK CHECKING

Note :

1. CD Block basically constructed to operate without adjustment. Therefore, check each item in order given.
2. Use YEDS-18 disc (3-702-101-01) unless otherwise indicated.
3. Use the oscilloscope with more than 10MΩ impedance.
4. Clean an object lens by an applicator with neutral detergent when the signal level is low than specified value with the following checks.

S Curve Check

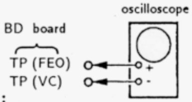

Procedure :

1. Connect oscilloscope to test point TP (FEO) on BD board.
2. Connect between test point TP (FES) and TP (VC) by lead wire.
3. Turned Power switch on and actuate the focus serch. (actuate the focus serch when disc table is moving in and out.)
4. Check the oscilloscope waveform (S curve) is symmetrical between A and B. And confirm peak to peak level within 3±1Vp-p.

S curve waveform

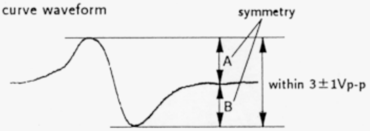

5. After check, remove the lead wire connected in step 2.

Note : • Try to mesure several times to make sure that the ratio of A : B or B : A is more than 10 : 7.

• Take sweep time as long as possible and light up the brightness to obtain best waveform.

RF Level Check

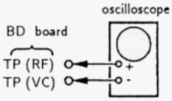

Procedure :

1. Connect oscilloscope to test point TP (RF) on BD board.
2. Turn Power switch on.
3. Put disc (YEDS-18) in and playback.
4. Confirm that oscilloscope waveform is clear and check RF signal level is correct or not.

Note :

Clear RF signal waveform means that the shape "◇" can be clearly distinguished at the center of the waveform.

RF signal waveform

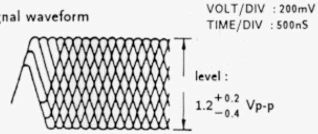

E-F Balance Check

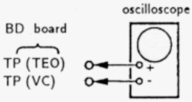

Procedure :

1. Connect test point TP (ADJ) to ground and TP (TES) to TP (VC) with lead wire.
2. Connect oscilloscope to test point TP (TEO) on BD board.
3. Turn Power switch on.
4. Put disc (YEDS-18) in and playback.
5. Confirm that the osilloscope waveform is symmetrical on the top and bottom in relation to 0V, and check this level.

Traverse oscilloscope

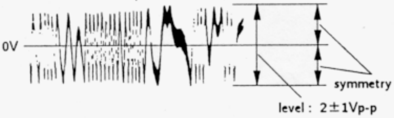

6. Remove the lead wire connected in step 1.

RF PLL Free-run Frequency Check

Procedure :

1. Connect frequency counter to test point (PCK) with lead wire.

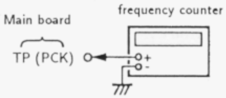

2. Turn Power switch on.
3. Confirm that reading on frequency counter is 4. 3218MHz.

Focus/Tracking Gain

This gain has a margin, so even if it is slightly off. There is no problem.

Therefore, do not perform, this adjustment.

Please note that it should be fixed to mechanical center position when you moved and do not know original position.

Adjustment Locations :

[BD board]

— conductor side —

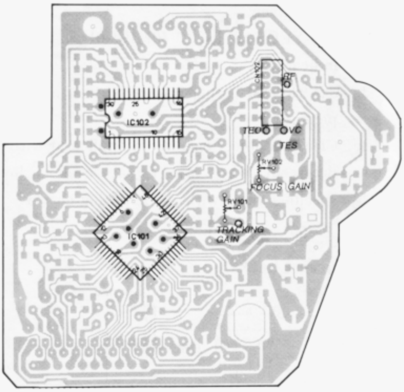

[Main board]

– **Component Side** –

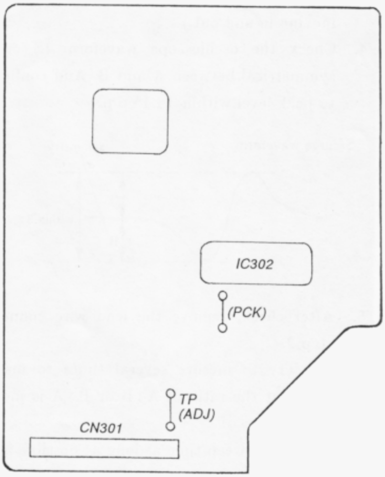

SECTION 4
DIAGRAMS

IC101 (CXA1372Q) PIN DESCRIPTIONS

PIN NO.	PIN NAME	I/O	FUNCTION
1	VC		2.5 Volts power supply.
2	FGD	I	Focus gain adjusting capacitor connected between ② pin and ③ pin.
3	FS3	I	Focus gain adjusting capacitor connected between ② pin and ③ pin.
4	FLB	I	Focus Servo low frequency boost-up capacitor connected.
5	FEO	O	Focus drive output.
6	FE−	I	Focus error amp inverted input.
7	SRCH	I	Connected capacitor to making the focus serch waveform.
8	TGU	I	Tracking gain adjusting capacitor connected between ⑧ pin and ⑨ pin.
9	TG2	I	Tracking gain adjusting capacitor connected between ⑧ pin and ⑨ pin.
10	AV CC		+5 Volts power supply.
11	TAO	O	Tracking drive output.
12	TA−	I	Tracking amp inverted input.
13	SL+	I	Sled amp non-inverted input.
14	SLO	O	Sled drive output.
15	SL−	I	Sled amp non-inverted input.
16	FSET	I	Phase stabilizer setting resistor connected.
17	ISET	I	Current setting resistor connected.
18	SSTOP	I	Limit switch connection port.
19	AV EE		Ground (0V).
20	DIRC	I	Direct control port. Non-connected.
21	LOCK	I	Sled free-run protection is operate at "L".
22	CLK	I	Serial data transmission clock input form digital signal processor.
23	XLT	I	Latch input from digital signal processor.
24	DATA	I	Serial input from digital signal processor.
25	SENS	O	Outputs internal state corresponding to address.
26	XRST	I	System reset input. Reset at "L".
27	C. OUT	O	Tracking counter output.
28	D GND		Digitel ground. Grounded
29	MIRR	O	Mirror output digital signal processor.
30	DFCT	O	Deffect output. Deffect at "H".
31	ASY	I	Auto symmetry control input.
32	EFM	O	EFM Comparator output.
33	FOK	O	Focus OK.
34	CC2	I	Deffect bottom hold input.
35	CC1	O	Deffect bottom hold output.
36	DV CC		+5 Volts power supply.
37	CB	I	Deffect bottom hold capacitor connected.
38	CP	I	Mirror hold capacitor connected.
39	RFI	I	RF Signal input (Capacitance coupled).
40	RFO	I	RF Signal input (Direct Coupled).
41	DV EE		Grounded (0V).
42	TZC	I	Tracking Zero-cross comparator input.
43	TE	I	Tracking error amp input.
44	TDFCT	I	Deffect correction hold capacitor connected.
45	ATSC	I	Anti-shock input.
46	FZC	I	Focus Zero-cross comparator input.
47	FE	I	Focus error input.
48	FDFCT	I	Deffect correction hold capacitor connected.

4-1. BLOCK DIAGRAM

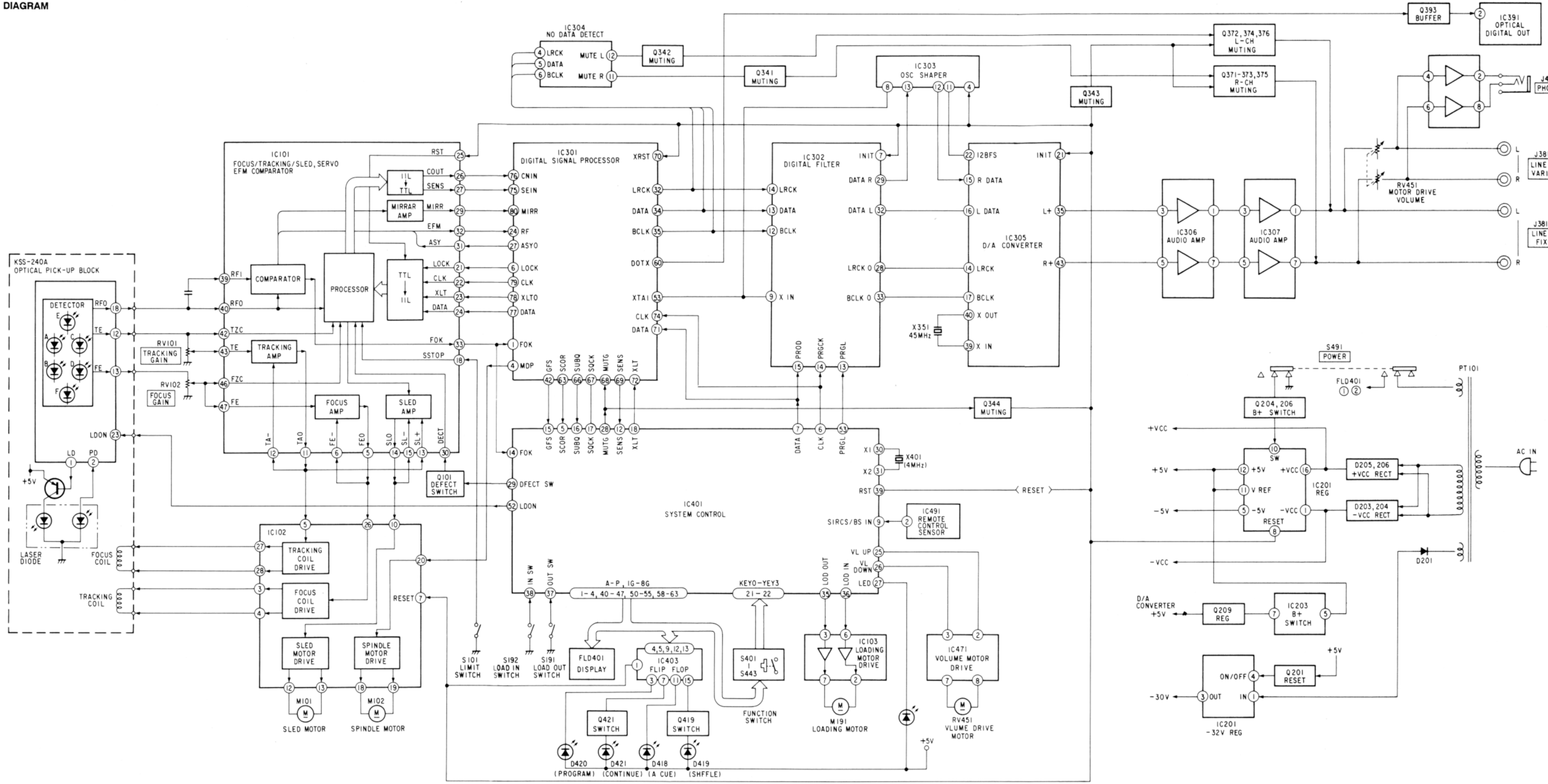

4-2. PRINTED WIRING BOARDS

• Circuit Boards Location

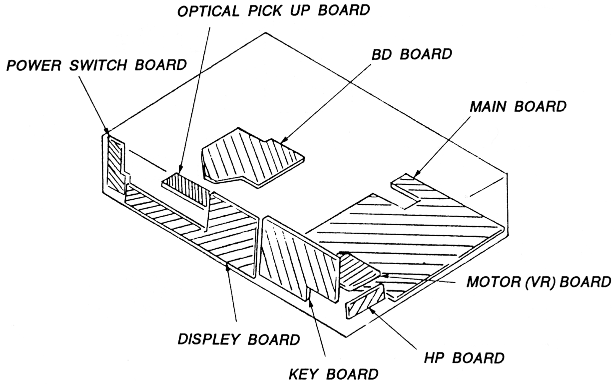

• Semiconductor Location

Ref. No.	Location	Ref. No.	Location
D101	B-22	IC202	G-17
D201	E-19	IC203	G-16
D202	I-19	IC301	H-16
D203	E-18	IC302	G-15
D204	E-18	IC303	G-14
D205	E-17	IC304	H-13
D206	E-17	IC305	E-15
D207	G-19	IC306	D-15
D208	F-17	IC307	C-15
D209	F-16	IC391	B-14
D341	F-15	IC401	C-9
D351	G-13	IC403	B-4
D401	E-2	IC451	H-6
D402	E-2	IC471	I-7
D403	E-3	IC491	H-2
D404	E-3		
D405	E-3	Q101	D-22
D406	B-9	Q201	F-19
D407	B-9	Q202	G-18
D408	B-9	Q203	F-18
D409	B-9	Q204	H-18
D410	B-9	Q205	H-18
D411	B-9	Q206	H-17
D412	B-4	Q207	G-18
D413	B-5	Q208	G-18
D414	B-5	Q209	F-16
D415	B-6	Q341	D-13
D416	B-6	Q342	D-14
D417	D-8	Q343	D-13
D418	D-3	Q344	G-13
D419	F-2	Q371	B-14
D420	F-3	Q372	C-16
D421	F-2	Q373	B-14
D471	J-7	Q374	C-16
		Q375	C-14
IC101	D-21	Q376	B-16
IC102	C-21	Q393	B-14
IC103	B-22	Q419	A-5
IC201	F-19	Q421	B-2

Note:
- ○—— : parts extracted from the component side.
- ■ : parts mounted on the conductor side.

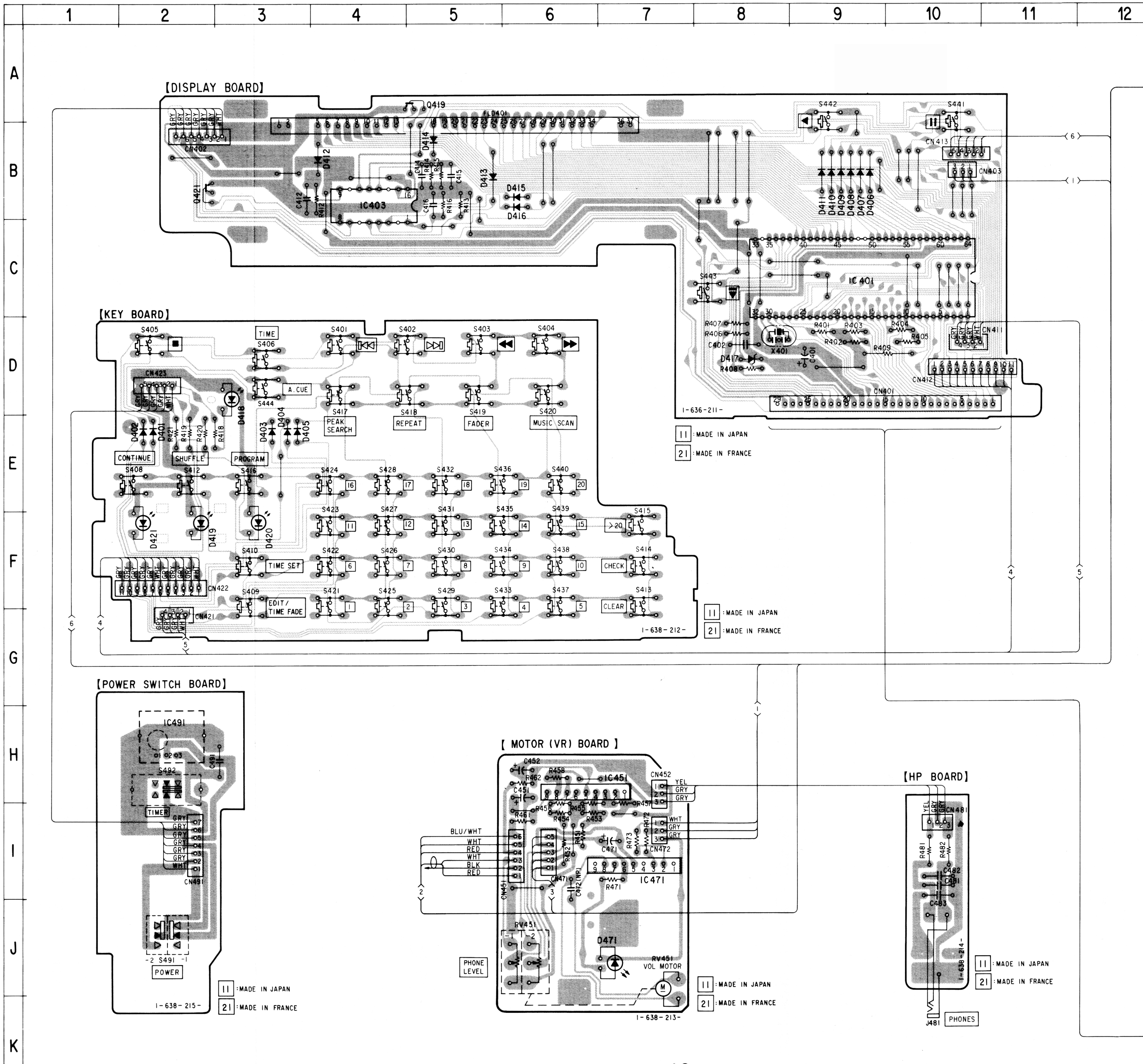

13	14	15	16	17	18	19	20	21	22	23	24	25	26	27

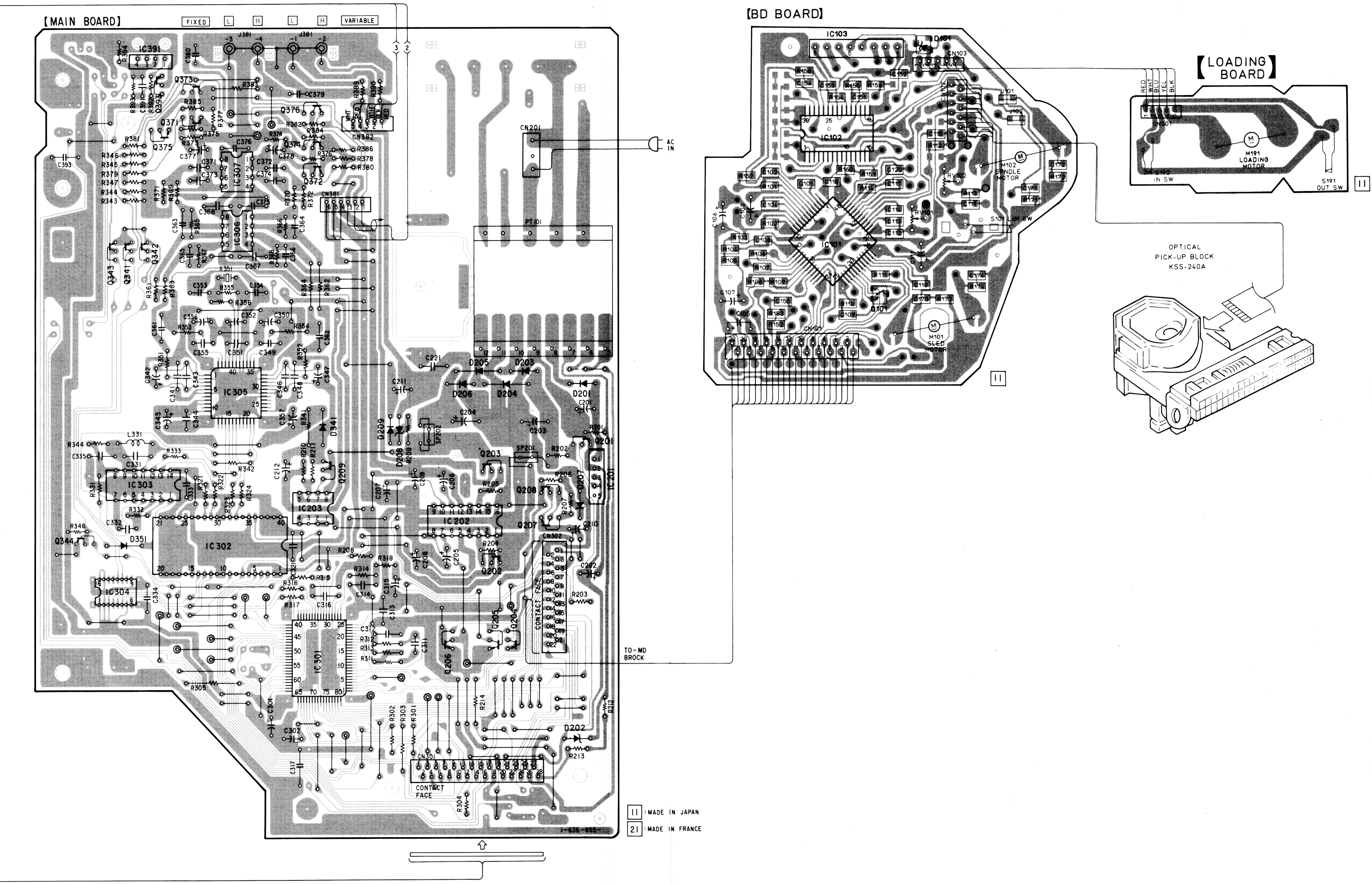

Semiconductor Lead Layouts

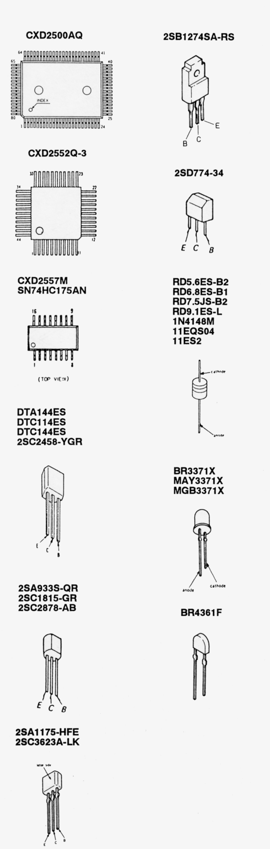

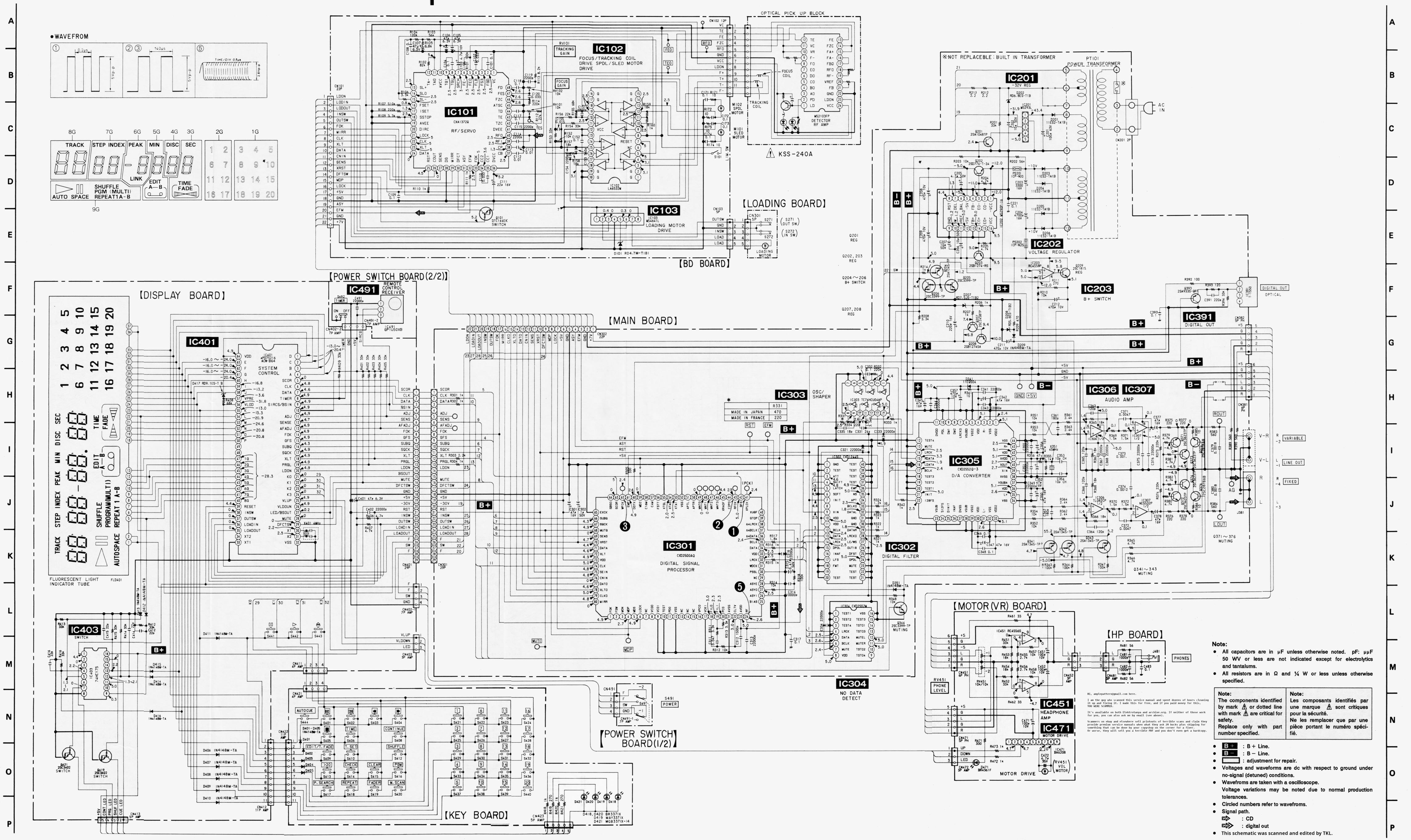

Hi, amplepattern@gmail.com here.

I am the guy who scanned this service manual and spent dozens of hours cleaning it up and fixing it. I made this for free, and if you paid money for this, YOU WERE SCAMMED.

It's available on both Elektrotanya and archive.org. If neither of those work for you, you can also ask me by email (see above).

Scammers on ebay and elsewhere sell printouts of terrible scans and claim they provide premium service manuals when what they ask 20 bucks plus shipping for something that can be done by your copyshop on the corner for a fiver.
Or worse, they will sell you a terrible PDF and you don't even get a hardcopy.

Note:

- All capacitors are in µF unless otherwise noted. pF: µµF 50 WV or less are not indicated except for electrolytics and tantalums.
- All resistors are in Ω and ¼ W or less unless otherwise specified.

Note:	Note:
The components identified by mark ⚠ or dotted line with mark ⚠ are critical for safety. Replace only with part number specified.	Les composants identifiés par une marque ⚠ sont critiques pour la sécurité. Ne les remplacer que par une pièce portant le numéro spécifié.

- B+ : B + Line.
- B– : B – Line.
- ▭ : adjustment for repair.
- Voltages and waveforms are dc with respect to ground under no-signal (detuned) conditions.
- Wavefroms are taken with a oscilloscope.
  Voltage variations may be noted due to normal production tolerances.
- Circled numbers refer to wavefroms.
- Signal path.
  ⇨ : CD
  ⇨⇨ : digital out
- This schematic was scanned and edited by TKL.

• **IC Block Diagram**

IC101 CXA1372Q

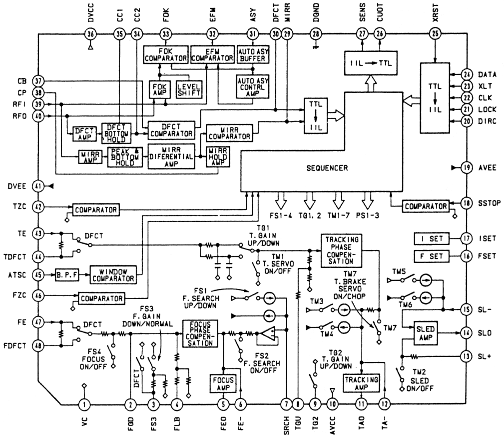

IC301 CXD2500AQ

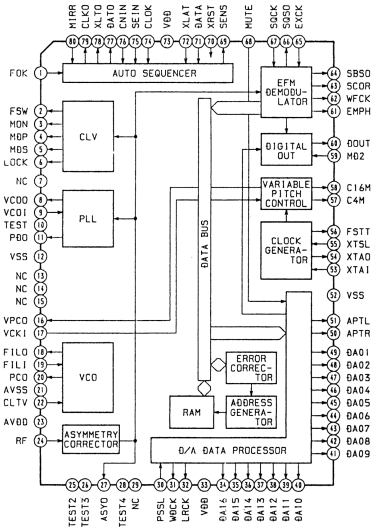

IC202 M5290P-16

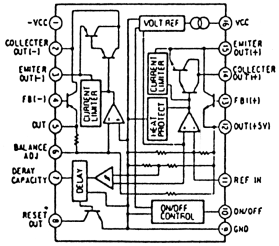

IC302 CXD1244S

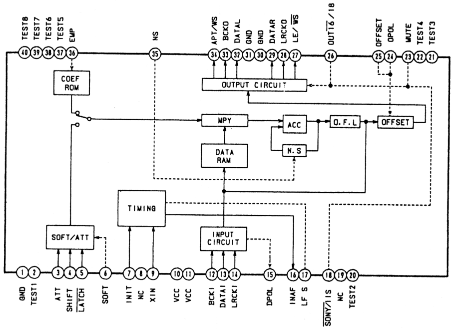

IC304 CXD2557M

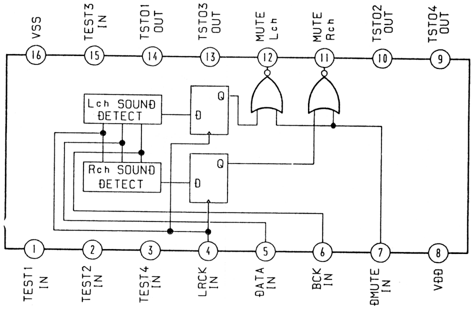

IC305 CXD2552Q-3

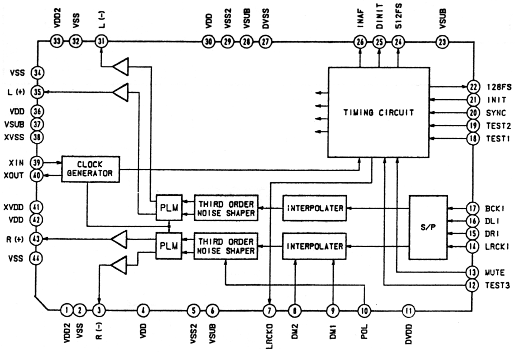

IC403 74HC175

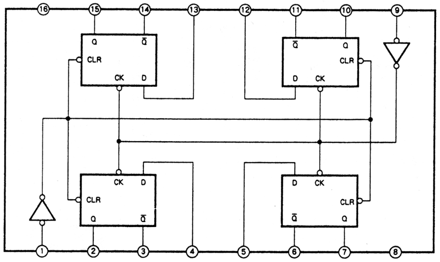

SECTION 5 EXPLODED VIEWS

NOTE:

- -XX and -X mean standardized parts, so they may have some differences from the original one.
- Color Indication of Appearance Parts
  Example:
  KNOB, BALANCE (WHITE) . . . (RED)
  ↑ Parts Color ↑ Cabinet's Color
- Items marked "*" are not stocked since they are seldom required for routine service. Some delay should be anticipated when ordering these items.
- The mechanical parts with no reference number in the exploded views are not supplied.
- Hardware (# mark) list is given in the last of this parts list.

The components identified by mark ⚠ or dotted line with mark ⚠ are critical for safety.
Replace only with part number specified.

Les composants identifiés par une marque ⚠ sont critiques pour la sécurité.
Ne les remplacer que par une pièce portant le neméro spécifié.

(1) CHASSIS SECTION

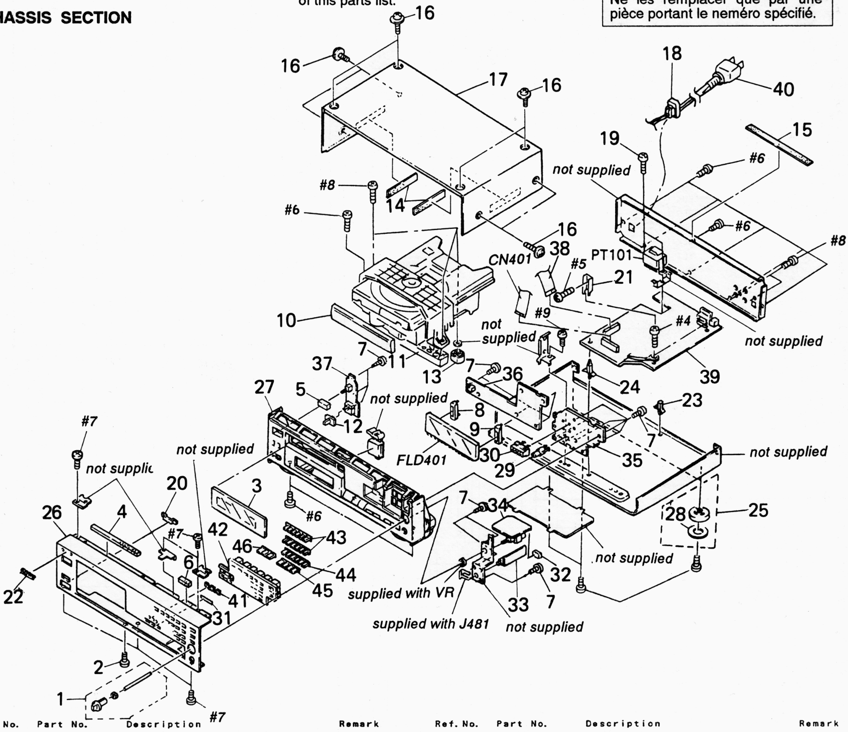

Ref. No.		Part No.	Description	Remark
1		A-4604-702-A	KNOB (HP) ASSY (MADE IN JAPAN)	
1		A-4604-721-A	KNOB (HP) ASSY (MADE IN FRANCE)	
2		3-703-685-21	SCREW (+BV 3X8)	
3		4-942-549-01	PLATE, INDICATION	
4	*	4-929-557-01	CUSHION (PANEL)	
5		4-922-921-01	BUTTON (POWER)	
6		9-911-845-XX	CUSHION (25)	
7		4-928-635-01	SCREW, +BV (2.6X8) TAPPING	
8	*	4-941-171-01	HOLDER (L)	
9	*	4-941-172-01	HOLDER (R)	
10		4-941-168-31	PANEL, LOADING (US, Canadian)	
10		4-941-168-01	PANEL, LOADING (AEP, UK)	
11		4-941-169-01	BASE (MD/F)	
12		4-943-114-11	BUTTON (TIMER)	
13		4-941-170-01	BASE (MD/R)	
14	*	4-929-561-01	CUSHION (CASE)	
15	*	4-927-653-01	SHEET (F/P)	
16		3-704-366-01	SCREW (CASE) (M3X8)	
17		4-943-897-11	CASE (MADE IN FRANCE)	
17		4-929-529-01	CASE (MADE IN JAPAN)	
18	*	3-703-571-11	BUSHING (S) (4516), CORD (US, Canadian)	
18	*	3-703-244-00	BUSHING (2104), CORD (AEP, UK)	
19		4-886-821-11	SCREW, S TIGHT, +PTTWH 3X6	
20		4-933-236-01	PLATE, RAY CATCHER	
21	*	4-941-237-01	HEAT SINK	
22		4-908-848-01	EMBLEM, SONY	
23	*	3-349-025-41	HOLDER, PC BOARD	
24	*	4-924-098-01	HOLDER, PC BOARD	
25		X-3304-938-2	FOOT ASSY	
26		4-945-317-01	PANEL (FRONT) (MADE IN FRANCE:AEP, UK)	
26		4-942-541-31	PANEL (FRONT) (US, Canadian)	
26		4-942-541-11	PANEL (FRONT) (MADE IN JAPAN:AEP)	
27		X-4941-268-1	PANEL SUB ASSY	
28		4-923-836-11	CUSHION	
29	*	3-362-478-11	HOLDER (T), LED	
30	*	4-942-546-01	HOLDER (LED/M)	
31	*	3-325-757-01	SHEET, ADHESIVE	
32	*	4-922-980-01	HOLDER (LED)	

Ref. No.		Part No.	Description	Remark
33	*	1-638-214-21	HP BOARD (MADE IN FRANCE)	
33	*	1-638-214-11	HP BOARD (MADE IN JAPAN)	
34	*	1-638-213-11	MOTOR VR BOARD (MADE IN JAPAN)	
34	*	1-638-213-21	MOTOR VR BOARD (MADE IN FRANCE)	
35	*	1-638-212-11	KEY BOARD (MADE IN JAPAN)	
35	*	1-638-212-21	KEY BOARD (MADE IN FRANCE)	
36	*	1-638-211-21	DISPLAY BOARD (MADE IN FRANCE)	
36	*	1-638-211-11	DISPLAY BOARD (MADE IN JAPAN)	
37	*	1-638-215-21	POWER SW BOARD (MADE IN FRANCE)	
37	*	1-638-215-11	POWER SW BOARD (MADE IN JAPAN)	
38		1-575-002-11	WIRE, FLAT TYPE (22 CORE)	
39	*	A-4617-911-A	MAIN BOARD, COMPLETE (US, Canadian)	
39	*	A-4617-912-A	MAIN BOARD, COMPLETE (MADE IN JAPAN:AEP)	
39	*	A-4617-730-A	MAIN BOARD, COMPLETE (MADE IN FRANCE:AEP, UK)	
40	⚠·	1-575-651-21	CORD, POWER (MADE IN JAPAN:AEP)	
40	⚠·	1-574-127-31	CORD, POWER (MADE IN FRANCE:AEP)	
40	⚠·	1-558-945-21	CORD, POWER (US, Canadian)	
40	⚠·	1-574-390-31	CORD, POWER (UK)	
41		4-941-254-01	INDICATOR (MODE)	
42	*	4-941-249-01	GUIDE, KNOB	
43		4-941-250-01	BUTTON (MC/A)	
44		4-941-251-01	BUTTON (MC/C)	
45		4-941-253-01	BUTTON (MC/E)	
46		4-941-252-01	BUTTON (MC/D)	
CN401		1-535-872-11	JUMPER, FILM (WITH TERMINAL)	
FLD401		1-519-618-21	INDICATOR TUBE, FLUORESCENT	
PT101	⚠·	1-449-921-11	TRANSFORMER, POWER (US, Canadian)	
PT101	⚠·	1-449-922-11	TRANSFORMER, POWER (MADE IN JAPAN:AEP)	
PT101	⚠·	1-449-925-11	TRANSFORMER, POWER (MADE IN FRANCE:AEP, UK)	

(2) CD MECHANISM SECTION (CDM14-5BD1)

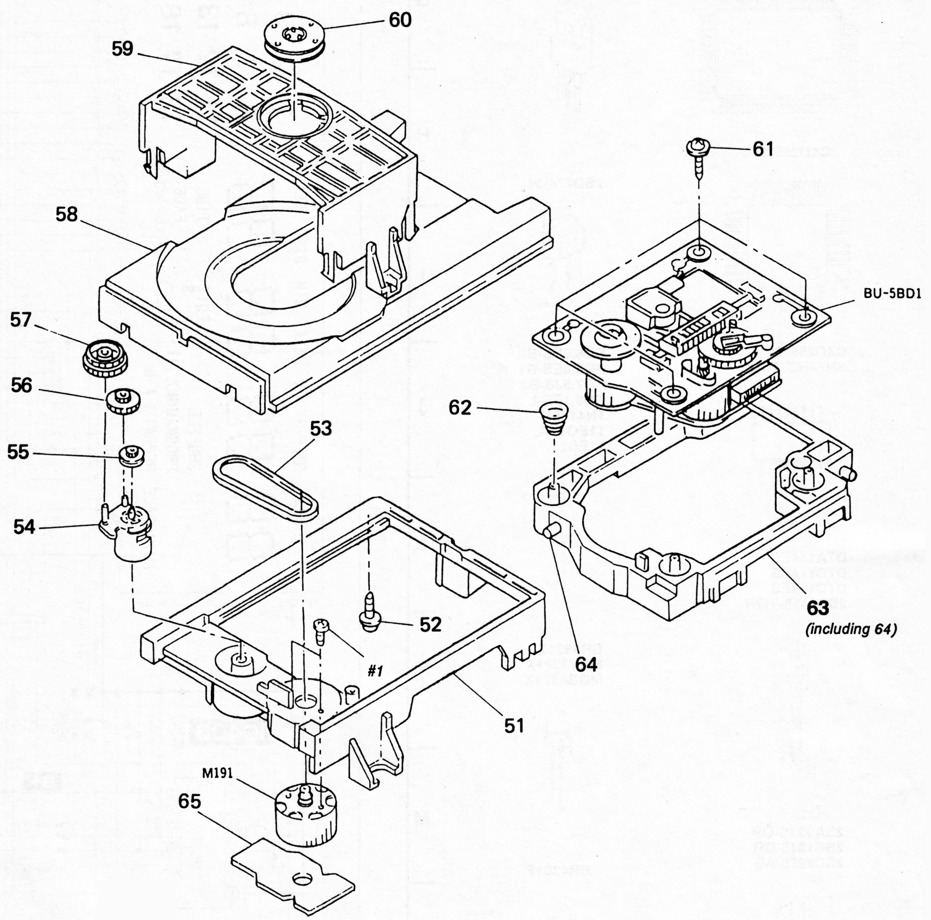

Ref. No.		Part No.	Description	Remark
51		4-933-111-01	CHASSIS (MD)	
52	*	4-917-583-21	BRACKET, YOKE	
53		4-927-649-01	BELT	
54		4-933-109-01	CAM	
55		4-927-651-01	PULLEY (S)	
56		4-927-628-01	GEAR (C)	
57		4-933-107-01	GEAR (PL)	
58		4-933-112-01	TABLE, DISK	
59		4-933-110-01	HOLDER (MG)	
60	*	1-452-538-11	MAGNET	
61		4-933-134-01	SCREW (+PTPWH M2.6X6)	
62		4-917-541-01	SPRING (B)	
63		4-933-129-01	HOLDER (BU)	
64		4-933-108-01	SHAFT (CAM)	
65	*	1-632-202-11	LOADING BOARD	
M191		A-4604-363-A	MOTOR (L) ASSY	

(3) OPTICAL PICK-UP BLOCK (BU-5BD1)

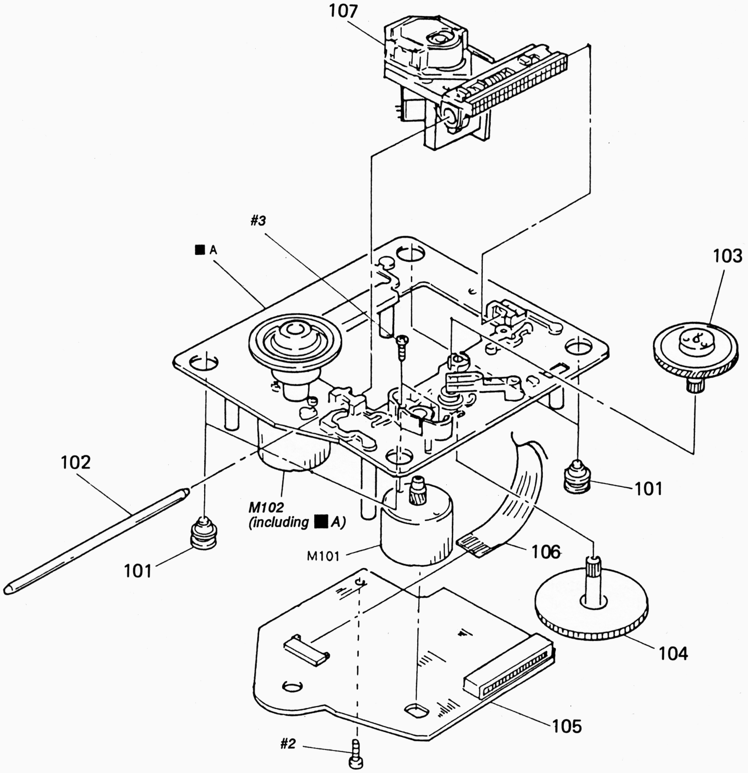

Ref. No.	Part No.	Description	Remark
101	4-933-126-01	INSULATOR (A)	
102	4-917-565-01	SHAFT, SLED	
103	4-917-567-01	GEAR (M)	
104	4-917-564-01	GEAR (P), FLATNESS	
105	* A-4617-161-A	BD BOARD, COMPLETE	
106	1-575-001-11	WIRE, FLAT TYPE (12 CORE)	
107	⚠ 8-848-144-11	DEVICE, OPTICAL KSS-240A	
M101	X-4917-523-3	BASE OUTSERT ASSY	
M102	X-4917-504-1	MOTOR ASSY, SLED	

Note: The components identified by mark ⚠ or dotted line with mark ⚠ are critical for safety. Replace only with part number specified.

BD

SECTION 6
ELECTRICAL PARTS LIST

NOTE:

- Due to standardization, replacements in the parts list may be different from the parts specified in the diagrams or the components used on the set.
- -XX and -X mean standardized parts, so they may have some difference from the original one.
- RESISTORS
  All resistors are in ohms.
  METAL: Metal-film resistor
  METAL OXIDE: Metal Oxide-film resistor
  F: nonflammable
- Items marked "*" are not stocked since they are seldom required for routine service. Some delay should be anticipated when ordering these items.
- SEMICONDUCTORS
  In each case, u: μ, for example:
  uA...: μA..., uPA...: μPA...,
  uPB...: μPB..., uPC...: μPC...,
  uPD...: μPD...
- CAPACITORS
  uF: μF
- COILS
  uH: μH

The components identified by mark ⚠ or dotted line with mark ⚠ are critical for safety.
Replace only with part number specified.

Les composants identifiés par une marque ⚠ sont critiques pour la sécurité.
Ne les remplacer que par une pièce portant le neméro spécifié.

Ref. No.	Part No.	Description			Remark
	* A-4617-161-A	BD BOARD, COMPLETE			
		******************			
		< CAPACITOR >			
C101	1-163-038-00	CERAMIC CHIP	0.1uF		25V
C102	1-163-989-11	CERAMIC CHIP	0.033uF	10%	25V
C103	1-126-163-11	ELECT	4.7uF	20%	50V
C104	1-163-038-00	CERAMIC CHIP	0.1uF		25V
C105	1-126-154-11	ELECT	47uF	20%	6.3V
C106	1-126-154-11	ELECT	47uF	20%	6.3V
C107	1-126-154-11	ELECT	47uF	20%	6.3V
C108	1-163-038-00	CERAMIC CHIP	0.1uF		25V
C109	1-163-038-00	CERAMIC CHIP	0.1uF		25V
C110	1-163-989-11	CERAMIC CHIP	0.033uF	10%	25V
C111	1-131-367-00	TANTALUM	22uF	10%	20V
C112	1-164-232-11	CERAMIC CHIP	0.01uF		50V
C113	1-164-232-11	CERAMIC CHIP	0.01uF		50V
C114	1-164-161-11	CERAMIC CHIP	0.0022uF	10%	100V
C115	1-164-161-11	CERAMIC CHIP	0.0022uF	10%	100V
C117	1-163-038-00	CERAMIC CHIP	0.1uF		25V
C118	1-163-038-00	CERAMIC CHIP	0.1uF		25V
C119	1-164-161-11	CERAMIC CHIP	0.0022uF	10%	100V
C120	1-163-989-11	CERAMIC CHIP	0.033uF	10%	25V
C151	1-163-019-00	CERAMIC CHIP	0.0068uF	10%	50V
C152	1-163-038-00	CERAMIC CHIP	0.1uF		25V
C153	1-163-006-11	CERAMIC CHIP	560PF	10%	50V
C154	1-164-161-11	CERAMIC CHIP	0.0022uF	10%	100V
C155	1-163-023-00	CERAMIC CHIP	0.015uF	5%	50V
C171	1-163-038-00	CERAMIC CHIP	0.1uF		25V
C172	1-163-038-00	CERAMIC CHIP	0.1uF		25V
C173	1-163-038-00	CERAMIC CHIP	0.1uF		25V
C174	1-163-038-00	CERAMIC CHIP	0.1uF		25V

Ref. No.	Part No.	Description			Remark
		< CONNECTOR >			
CN101	1-568-796-11	SOCKET, CONNECTOR 22P			
CN102	1-568-795-11	SOCKET, CONNECTOR 12P			
CN103	* 1-564-721-11	PIN, CONNECTOR (SMALL TYPE) 5P			
		< DIODE >			
D101	8-719-105-72	DIODE RD4.7M-B1			
		< IC >			
IC101	8-752-050-82	IC CXA1372Q			
IC102	8-759-822-36	IC LA6532M-T1			
IC103	8-759-633-65	IC M54641L			
		< JACK >			
J101	1-216-295-00	METAL CHIP	0	5%	1/10W
J102	1-216-295-00	METAL CHIP	0	5%	1/10W
		< TRANSISTOR >			
Q101	8-729-901-01	TRANSISTOR DTC144EK			
		< RESISTOR >			
R101	1-216-097-00	METAL CHIP	100K	5%	1/10W
R102	1-216-095-00	METAL CHIP	82K	5%	1/10W
R103	1-216-091-00	METAL CHIP	56K	5%	1/10W
R104	1-216-099-00	METAL CHIP	120K	5%	1/10W
R105	1-216-069-00	METAL CHIP	6.8K	5%	1/10W
R106	1-216-061-00	METAL CHIP	3.3K	5%	1/10W
R107	1-216-114-00	METAL GLAZE	510K	5%	1/10W
R108	1-216-105-00	METAL CHIP	220K	5%	1/10W
R109	1-216-061-00	METAL CHIP	3.3K	5%	1/10W
R110	1-216-049-00	METAL CHIP	1K	5%	1/10W

BD DISPLAY

Ref. No.	Part No.	Description			Remark
R111	1-216-049-00	METAL CHIP	1K	5%	1/10W
R112	1-216-083-00	METAL CHIP	27K	5%	1/10W
R113	1-216-071-00	METAL CHIP	8.2K	5%	1/10W
R114	1-216-105-00	METAL CHIP	220K	5%	1/10W
R152	1-216-073-00	METAL CHIP	10K	5%	1/10W
R153	1-216-085-00	METAL CHIP	33K	5%	1/10W
R154	1-216-085-00	METAL CHIP	33K	5%	1/10W
R155	1-216-093-00	METAL CHIP	68K	5%	1/10W
R156	1-216-081-00	METAL CHIP	22K	5%	1/10W
R157	1-216-079-00	METAL CHIP	18K	5%	1/10W
R158	1-216-079-00	METAL CHIP	18K	5%	1/10W
R159	1-216-079-00	METAL CHIP	18K	5%	1/10W
R160	1-216-049-00	METAL CHIP	1K	5%	1/10W
R171	1-216-001-00	METAL CHIP	10	5%	1/10W
R172	1-216-001-00	METAL CHIP	10	5%	1/10W
R173	1-216-001-00	METAL CHIP	10	5%	1/10W
R174	1-216-001-00	METAL CHIP	10	5%	1/10W
		< VARIABLE RESISTOR >			
RV101	1-238-016-11	RES, ADJ, CARBON 10K			
RV102	1-238-016-11	RES, ADJ, CARBON 10K			
		< SWITCH >			
S101	1-572-085-11	SWITCH, LEAF			

****

Ref. No.	Part No.	Description			Remark
*	1-638-211-11	DISPLAY BOARD (MADE IN JAPAN)			
*	1-638-211-21	DISPLAY BOARD (MADE IN FRANCE)			
		******************************			
*	4-941-171-01	HOLDER (L)			
*	4-941-172-01	HOLDER (R)			
		< CAPACITOR >			
C401	1-126-154-11	ELECT	47uF	20%	6.3V
C402	1-161-494-00	CERAMIC	0.022uF		25V
C412	1-162-207-31	CERAMIC	22PF	5%	50V
C413	1-162-207-31	CERAMIC	22PF	5%	50V
C414	1-162-207-31	CERAMIC	22PF	5%	50V
C415	1-162-207-31	CERAMIC	22PF	5%	50V
C416	1-162-207-31	CERAMIC	22PF	5%	50V
		< CONNECTOR >			
CN401	1-535-872-11	JUMPER, FILM (WITH TERMINAL)			

Ref. No.	Part No.	Description			Remark
		< DIODE >			
D406	8-719-107-94	DIODE 1SS202-1 (MADE IN FRANCE)			
D406	8-719-987-63	DIODE 1N4148M (MADE IN JAPAN)			
D407	8-719-107-94	DIODE 1SS202-1 (MADE IN FRANCE)			
D407	8-719-987-63	DIODE 1N4148M (MADE IN JAPAN)			
D408	8-719-107-94	DIODE 1SS202-1 (MADE IN FRANCE)			
D408	8-719-987-63	DIODE 1N4148M (MADE IN JAPAN)			
D409	8-719-107-94	DIODE 1SS202-1 (MADE IN FRANCE)			
D409	8-719-987-63	DIODE 1N4148M (MADE IN JAPAN)			
D410	8-719-107-94	DIODE 1SS202-1 (MADE IN FRANCE)			
D410	8-719-987-63	DIODE 1N4148M (MADE IN JAPAN)			
D411	8-719-107-94	DIODE 1SS202-1 (MADE IN FRANCE)			
D411	8-719-987-63	DIODE 1N4148M (MADE IN JAPAN)			
D412	8-719-107-94	DIODE 1SS202-1 (MADE IN FRANCE)			
D412	8-719-987-63	DIODE 1N4148M (MADE IN JAPAN)			
D413	8-719-107-94	DIODE 1SS202-1 (MADE IN FRANCE)			
D413	8-719-987-63	DIODE 1N4148M (MADE IN JAPAN)			
D414	8-719-107-94	DIODE 1SS202-1 (MADE IN FRANCE)			
D414	8-719-987-63	DIODE 1N4148M (MADE IN JAPAN)			
D415	8-719-107-94	DIODE 1SS202-1 (MADE IN FRANCE)			
D415	8-719-987-63	DIODE 1N4148M (MADE IN JAPAN)			
D416	8-719-107-94	DIODE 1SS202-1 (MADE IN FRANCE)			
D416	8-719-987-63	DIODE 1N4148M (MADE IN JAPAN)			
D417	8-719-121-24	DIODE RD9.1ES-L			
		< FLUORESCENT INDICATOR >			
FLD401	1-519-618-21	INDICATOR TUBE, FLUORESCENT			
		< IC >			
IC401	8-759-152-97	IC uPD75216ACW-B64			
IC403	8-759-916-55	IC SN74HC175AN			
		< TRANSISTOR >			
Q419	8-729-900-80	TRANSISTOR DTC114ES			
Q421	8-729-900-80	TRANSISTOR DTC114ES			
		< RESISTOR >			
R401	1-249-435-11	CARBON	33K	5%	1/4W
R402	1-249-435-11	CARBON	33K	5%	1/4W
R403	1-249-435-11	CARBON	33K	5%	1/4W
R404	1-249-435-11	CARBON	33K	5%	1/4W
R405	1-249-435-11	CARBON	33K	5%	1/4W

DISPLAY | HP | KEY

Ref. No.	Part No.	Description	Remark
R406	1-249-425-11	CARBON 4.7K 5% 1/4W	
R407	1-249-425-11	CARBON 4.7K 5% 1/4W	
R408	1-249-439-11	CARBON 68K 5% 1/4W	
R409	1-249-435-11	CARBON 33K 5% 1/4W	
R412	1-249-435-11	CARBON 33K 5% 1/4W	
R413	1-249-435-11	CARBON 33K 5% 1/4W	
R414	1-249-435-11	CARBON 33K 5% 1/4W	
R415	1-249-435-11	CARBON 33K 5% 1/4W	
R416	1-249-435-11	CARBON 33K 5% 1/4W	

< SWITCH >

Ref. No.	Part No.	Description	Remark
S441	1-554-303-21	SWITCH, TACTILE (▮▮) (MADE IN JAPAN)	
S441	1-554-303-81	SWITCH, TACTILE (▮▮) (MADE IN FRANCE)	
S442	1-554-303-21	SWITCH, TACTILE (▷) (MADE IN JAPAN)	
S442	1-554-303-81	SWITCH, TACTILE (▷) (MADE IN FRANCE)	
S443	1-554-303-21	SWITCH, TACTILE (⏏) (MADE IN JAPAN)	
S443	1-554-303-81	SWITCH, TACTILE (⏏) (MADE IN FRANCE)	

< CERAMIC >

Ref. No.	Part No.	Description	Remark
X401	1-577-358-21	VIBRATOR, CERAMIC 4MHz	

****

* 1-638-214-11 HP BOARD (MADE IN JAPAN)
* 1-638-214-21 HP BOARD (MADE IN FRANCE)
****

< CAPACITOR >

Ref. No.	Part No.	Description	Remark
C481	1-162-294-31	CERAMIC 0.001uF 10% 50V	
C482	1-162-294-31	CERAMIC 0.001uF 10% 50V	
C483	1-164-159-11	CERAMIC 0.1uF 50V	

< CONNECTOR >

Ref. No.	Part No.	Description	Remark
CN481	* 1-568-941-11	PIN, CONNECTOR 3P	

< JACK >

Ref. No.	Part No.	Description	Remark
J481	1-568-519-41	JACK, LARGE TYPE (PHONES)	

< RESISTOR >

Ref. No.	Part No.	Description	Remark
R481	1-249-402-11	CARBON 56 5% 1/4W	
R482	1-249-402-11	CARBON 56 5% 1/4W	

****

* 1-638-212-11 KEY BOARD (MADE IN JAPAN)
* 1-638-212-21 KEY BOARD (MADE IN FRANCE)
****

Ref. No.	Part No.	Description	Remark
	* 3-362-478-11	HOLDER (T), LED	
	* 4-942-546-01	HOLDER (LED/M)	

< CONNECTOR >

Ref. No.	Part No.	Description	Remark
CN421	* 1-568-953-11	PIN, CONNECTOR 4P	
CN422	* 1-568-938-11	PIN, CONNECTOR 11P	
CN423	* 1-568-954-11	PIN, CONNECTOR 5P	

< DIODE >

Ref. No.	Part No.	Description	Remark
D401	8-719-107-94	DIODE 1SS202-1 (MADE IN FRANCE)	
D401	8-719-987-63	DIODE 1N4148M (MADE IN JAPAN)	
D402	8-719-107-94	DIODE 1SS202-1 (MADE IN FRANCE)	
D402	8-719-987-63	DIODE 1N4148M (MADE IN JAPAN)	
D403	8-719-107-94	DIODE 1SS202-1 (MADE IN FRANCE)	
D403	8-719-987-63	DIODE 1N4148M (MADE IN JAPAN)	
D404	8-719-107-94	DIODE 1SS202-1 (MADE IN FRANCE)	
D404	8-719-987-63	DIODE 1N4148M (MADE IN JAPAN)	
D405	8-719-107-94	DIODE 1SS202-1 (MADE IN FRANCE)	
D405	8-719-987-63	DIODE 1N4148M (MADE IN JAPAN)	
D418	8-719-987-97	DIODE BR3371X	
D419	8-719-971-52	DIODE MAY3371X-M-177	
D420	8-719-987-97	DIODE BR3371X	
D421	8-719-987-XX	DIODE MBG3371X-14	

< RESISTOR >

Ref. No.	Part No.	Description	Remark
R418	1-249-417-11	CARBON 1K 5% 1/4W	
R419	1-249-410-11	CARBON 270 5% 1/4W	
R420	1-249-417-11	CARBON 1K 5% 1/4W	
R421	1-249-410-11	CARBON 270 5% 1/4W	

< SWITCH > (MADE IN JAPAN)

Ref. No.	Part No.	Description	Remark
S401	1-554-303-21	SWITCH, TACTILE (|◁◁)	
S402	1-554-303-21	SWITCH, TACTILE (▷▷|)	
S403	1-554-303-21	SWITCH, TACTILE (◀◀)	
S404	1-554-303-21	SWITCH, TACTILE (▶▶)	
S405	1-554-303-21	SWITCH, TACTILE (■)	
S406	1-554-303-21	SWITCH, TACTILE (TIME)	
S408	1-554-303-21	SWITCH, TACTILE (CONTINUE)	
S409	1-554-303-21	SWITCH, TACTILE (EDIT/TIME FADE)	
S410	1-554-303-21	SWITCH, TACTILE (TIME SET)	
S412	1-554-303-21	SWITCH, TACTILE (SHUFFLE)	
S413	1-554-303-21	SWITCH, TACTILE (>20)	
S414	1-554-303-21	SWITCH, TACTILE (CHECK)	
S415	1-554-303-21	SWITCH, TACTILE (CLEAR)	
S416	1-554-303-21	SWITCH, TACTILE (PGM)	
S417	1-554-303-21	SWITCH, TACTILE (PEAK SEARCH)	

KEY **LOADING** **MAIN**

Ref. No.	Part No.	Description	Remark
S418	1-554-303-21	SWITCH, TACTILE (REPEAT)	
S419	1-554-303-21	SWITCH, TACTILE (FADER)	
S420	1-554-303-21	SWITCH, TACTILE (MUSIC SCAN)	
S421	1-554-303-21	SWITCH, TACTILE (1)	
S422	1-554-303-21	SWITCH, TACTILE (6)	
S423	1-554-303-21	SWITCH, TACTILE (11)	
S424	1-554-303-21	SWITCH, TACTILE (16)	
S425	1-554-303-21	SWITCH, TACTILE (2)	
S426	1-554-303-21	SWITCH, TACTILE (7)	
S427	1-554-303-21	SWITCH, TACTILE (12)	
S428	1-554-303-21	SWITCH, TACTILE (17)	
S429	1-554-303-21	SWITCH, TACTILE (3)	
S430	1-554-303-21	SWITCH, TACTILE (8)	
S431	1-554-303-21	SWITCH, TACTILE (13)	
S432	1-554-303-21	SWITCH, TACTILE (18)	
S433	1-554-303-21	SWITCH, TACTILE (4)	
S434	1-554-303-21	SWITCH, TACTILE (9)	
S435	1-554-303-21	SWITCH, TACTILE (14)	
S436	1-554-303-21	SWITCH, TACTILE (19)	
S437	1-554-303-21	SWITCH, TACTILE (5)	
S438	1-554-303-21	SWITCH, TACTILE (10)	
S439	1-554-303-21	SWITCH, TACTILE (15)	
S440	1-554-303-21	SWITCH, TACTILE (20)	
S444	1-554-303-21	SWITCH, TACTILE (A. SPACE/A. CUE) (MADE IN JAPAN)	
		< SWITCH > (MADE IN FRANCE)	
S401	1-554-303-81	SWITCH, TACTILE (|◁◁)	
S402	1-554-303-81	SWITCH, TACTILE (▷▷|)	
S403	1-554-303-81	SWITCH, TACTILE (◀◀)	
S404	1-554-303-81	SWITCH, TACTILE (▶▶)	
S405	1-554-303-81	SWITCH, TACTILE (■)	
S406	1-554-303-81	SWITCH, TACTILE (TIME)	
S408	1-554-303-81	SWITCH, TACTILE (CONTINUE)	
S409	1-554-303-81	SWITCH, TACTILE (EDIT/TIME FADE)	
S410	1-554-303-81	SWITCH, TACTILE (TIME SET)	
S412	1-554-303-81	SWITCH, TACTILE (SHUFFLE)	
S413	1-554-303-81	SWITCH, TACTILE (>20)	
S414	1-554-303-81	SWITCH, TACTILE (CHECK)	
S415	1-554-303-81	SWITCH, TACTILE (CLEAR)	
S416	1-554-303-81	SWITCH, TACTILE (PGM)	
S417	1-554-303-81	SWITCH, TACTILE (PEAK SEARCH)	
S418	1-554-303-81	SWITCH, TACTILE (REPEAT)	
S419	1-554-303-81	SWITCH, TACTILE (FADER)	
S420	1-554-303-81	SWITCH, TACTILE (MUSIC SCAN)	
S421	1-554-303-81	SWITCH, TACTILE (1)	
S422	1-554-303-81	SWITCH, TACTILE (6)	

Ref. No.	Part No.	Description	Remark
S423	1-554-303-81	SWITCH, TACTILE (11)	
S424	1-554-303-81	SWITCH, TACTILE (16)	
S425	1-554-303-81	SWITCH, TACTILE (2)	
S426	1-554-303-81	SWITCH, TACTILE (7)	
S427	1-554-303-81	SWITCH, TACTILE (12)	
S428	1-554-303-81	SWITCH, TACTILE (17)	
S429	1-554-303-81	SWITCH, TACTILE (3)	
S430	1-554-303-81	SWITCH, TACTILE (8)	
S431	1-554-303-81	SWITCH, TACTILE (13)	
S432	1-554-303-81	SWITCH, TACTILE (18)	
S433	1-554-303-81	SWITCH, TACTILE (4)	
S434	1-554-303-81	SWITCH, TACTILE (9)	
S435	1-554-303-81	SWITCH, TACTILE (14)	
S436	1-554-303-81	SWITCH, TACTILE (19)	
S437	1-554-303-81	SWITCH, TACTILE (5)	
S438	1-554-303-81	SWITCH, TACTILE (10)	
S439	1-554-303-81	SWITCH, TACTILE (15)	
S440	1-554-303-81	SWITCH, TACTILE (20)	
S444	1-554-303-81	SWITCH, TACTILE (A. SPACE/A. CUE) (MADE IN FRANCE)	

****

Ref. No.	Part No.	Description	Remark
	* 1-632-202-11	LOADING BOARD (MADE IN JAPAN)	
	* 1-632-202-21	LOADING BOARD (MADE IN FRANCE)	
		******************************	
		< CONNECTOR >	
CN301	* 1-564-707-11	PIN, CONNECTOR (SMALL TYPE) 5P	
		< SWITCH >	
S271	1-572-086-11	SWITCH, LEAF (OUT SW)	
S272	1-572-086-11	SWITCH, LEAF (IN SW)	

****

Ref. No.	Part No.	Description	Remark
	* A-4617-911-A	MAIN BOARD, COMPLETE (US, Canadian)	
	* A-4617-912-A	MAIN BOARD, COMPLETE (MADE IN JAPAN:AEP)	
	* A-4617-730-A	MAIN BOARD, COMPLETE (MADE IN FRANCE:AEP, UK)	
		**************************************	
	* 4-941-237-01	HEAT SINK	
	7-682-547-09	SCREW +B 3X6	
		< CAPACITOR >	
C201	1-124-572-11	ELECT 100uF 20% 63V	
C202	1-126-059-11	ELECT 10uF 20% 50V	
C203	1-124-887-00	ELECT 3300uF 20% 16V	
C204	1-126-937-11	ELECT 4700uF 20% 16V	
C205	1-126-163-11	ELECT 4.7uF 20% 50V	

MAIN | MOTOR VR | POWER SW

Ref. No.	Part No.	Description	Remark
R373	1-247-887-00	CARBON 220K 5%	1/4W
R374	1-247-887-00	CARBON 220K 5%	1/4W
R375	1-249-409-11	CARBON 220 5%	1/4W
R376	1-249-409-11	CARBON 220 5%	1/4W
R377	1-249-409-11	CARBON 220 5%	1/4W
R378	1-249-409-11	CARBON 220 5%	1/4W
R379	1-249-425-11	CARBON 4.7K 5%	1/4W
R380	1-249-425-11	CARBON 4.7K 5%	1/4W
R381	1-249-425-11	CARBON 4.7K 5%	1/4W
R382	1-249-425-11	CARBON 4.7K 5%	1/4W
R383	1-249-414-11	CARBON 560 5%	1/4W
R384	1-249-414-11	CARBON 560 5%	1/4W
R385	1-249-393-11	CARBON 10 5%	1/4W
R386	1-249-393-11	CARBON 10 5%	1/4W
R389	1-249-414-11	CARBON 560 5%	1/4W
R390	1-249-414-11	CARBON 560 5%	1/4W
R392	1-249-405-11	CARBON 100 5%	1/4W
R393	1-249-406-11	CARBON 120 5%	1/4W
R394	1-249-435-11	CARBON 33K 5%	1/4W
		< SWITCH >	
S201 ⚠·	1-571-722-11	SWITCH, VOLTAGE SELECTION (110-120V/220-240V)	
		< CRYSTAL >	
X351	1-579-161-11	VIBRATOR, CRYSTAL 45MHz	

****

* 1-638-213-11 MOTOR VR BOARD (MADE IN JAPAN)
* 1-638-213-21 MOTOR VR BOARD (MADE IN FRANCE)
****

Ref. No.	Part No.	Description	Remark
	* 4-922-980-01	HOLDER (LED)	
		< CAPACITOR >	
C451	1-124-994-11	ELECT 100uF 20%	10V
C452	1-124-994-11	ELECT 100uF 20%	10V
C471	1-124-994-11	ELECT 100uF 20%	10V
C472	1-124-277-11	ELECT 4.7uF 20%	35V
		< CONNECTOR >	
CN451	* 1-564-708-11	PIN, CONNECTOR (SMALL TYPE) 6P	
CN471	* 1-564-707-11	PIN, CONNECTOR (SMALL TYPE) 5P	
CN472	* 1-568-941-11	PIN, CONNECTOR 3P	
		< DIODE >	
D471	8-719-970-49	DIODE BR4361F	
		< IC >	
IC451	8-759-981-89	IC RC4556S	
IC471	8-759-962-08	IC BA6208	
		< RESISTOR >	
R451	1-249-435-11	CARBON 33K 5%	1/4W
R452	1-249-435-11	CARBON 33K 5%	1/4W
R453	1-249-432-11	CARBON 18K 5%	1/4W
R454	1-249-432-11	CARBON 18K 5%	1/4W
R455	1-249-422-11	CARBON 2.7K 5%	1/4W
R456	1-249-422-11	CARBON 2.7K 5%	1/4W
R457	1-249-429-11	CARBON 10K 5%	1/4W
R458	1-249-429-11	CARBON 10K 5%	1/4W
R461	1-249-399-11	CARBON 33 5%	1/4W
R462	1-249-399-11	CARBON 33 5%	1/4W
R471	1-249-411-11	CARBON 330 5%	1/4W
R472	1-249-417-11	CARBON 1K 5%	1/4W
R473	1-249-417-11	CARBON 1K 5%	1/4W
		< VARIABLE RESISTOR >	
RV451	1-241-302-11	RES, VAR, CARBON 10K/10K (PHONE LEVEL)	

****

* 1-638-215-11 POWER SW BOARD (MADE IN JAPAN)
* 1-638-215-21 POWER SW BOARD (MADE IN FRANCE)
****

Ref. No.	Part No.	Description	Remark
		< CAPACITOR >	
C491	1-161-494-00	CERAMIC 0.022uF	25V
		< CONNECTOR >	
CN491	* 1-568-934-11	PIN, CONNECTOR 7P	
		< IC >	
IC491	8-749-922-36	IC GP1U50XB	
		< SWITCH >	
S491	1-554-118-00	SWITCH, PUSH (1 KEY) (POWER)	
S492	1-554-481-00	SWITCH, SLIDE (TIMER)	

Note: The components identified by mark ⚠ or dotted line with mark ⚠ are critical for safety.
Replace only with part number specified.

Ref. No.		Part No.	Description	Remark
			MISCELLANEOUS	
			*************	
38		1-575-002-11	WIRE, FLAT TYPE (22 CORE)	
40	⚠·	1-558-945-21	CORD, POWER (US, Canadian)	
40	⚠·	1-574-127-31	CORD, POWER (MADE IN FRANCE:AEP)	
40	⚠·	1-574-390-31	CORD, POWER (UK)	
40	⚠·	1-575-651-21	CORD, POWER (MADE IN JAPAN:AEP)	
60	*	1-452-538-11	MAGNET	
106		1-575-001-11	WIRE, FLAT TYPE (12 CORE)	
107	⚠·	8-848-144-11	DEVICE, OPTICAL KSS-240A	
M101		X-4917-523-3	BASE OUTSERT ASSY	
M102		X-4917-504-1	MOTOR ASSY, SLED	
M191		A-4604-363-A	MOTOR (L) ASSY	
PT101	⚠·	1-449-921-11	TRANSFORMER, POWER (US, Canadian)	
PT101	⚠·	1-449-922-11	TRANSFORMER, POWER (MADE IN JAPAN:AEP)	
PT101	⚠·	1-449-925-11	TRANSFORMER, POWER (MADE IN FRANCE:AEP, UK)	

****

ACCESSORY & PACKING MATERIAL
****

Ref. No.		Part No.	Description	Remark
		1-465-594-11	COMMANDER, REMOTE (RM-D791)	
		1-558-271-11	CORD, CONNECTION (MADE IN FRANCE:AEP, UK)	
		1-559-533-11	CORD, CONNECTION (Canadian, MADE IN JAPAN, AEP)	
	*	3-704-343-01	SHEET (STANDARD), PROTECTION	
		3-707-584-01	COVER, BATTERY	
		3-752-690-11	MANUAL, INSTRUCTION (ENGLISH, FRENCH, SPANISH, PORTUGUESE) (MADE IN JAPAN:AEP)	
		3-752-690-21	MANUAL, INSTRUCTION (ENGLISH) (US, Canadian)	
		3-752-690-41	MANUAL, INSTRUCTION (GERMAN, DUTCH, SWEDISH, ITALIAN) (MADE IN JAPAN:AEP)	
		3-752-690-51	MANUAL, INSTRUCTION (ENGLISH, FRENCH, SPANISH, PORTUGUESE) (MADE IN FRANCE:AEP, UK)	
		3-752-690-61	MANUAL, INSTRUCTION (GERMAN, DUTCH, SWEDISH, ITALIAN) (MADE IN FRANCE:AEP)	
		3-795-629-11	INSTRUCTION	
	*	4-941-548-01	LABEL, CLASS 1 (AEP, UK)	
	*	4-941-925-01	CUSHION	
	*	4-944-108-11	INDIVIDUAL CARTON	

HARDWARE LIST

Ref. No.	Part No.	Description	Remark
# 1	7-621-775-10	SCREW +B 2.6X4	
# 2	7-685-134-19	SCREW +BTP 2.6X8 TYPE2 N-S	
# 3	7-621-255-15	SCREW +P 2X3	
# 4	7-682-547-04	SCREW +BVTT 3X6 (S)	
# 5	7-682-547-09	SCREW +B 3X6	
# 6	7-682-548-09	SCREW +BVTT 3X8 (S)	
# 7	7-685-646-79	SCREW +BVTP 3X8 TYPE2 N-S	
# 8	7-685-647-79	SCREW +BVTP 3X10 TYPE2 N-S	
# 9	7-685-870-01	SCREW +BVTT 3X5 (S)	

Note: The components identified by mark ⚠ or dotted line with mark ⚠ are critical for safety.
Replace only with part number specified.

English
91C0591-1
Printed in Japan
© 1991.3

9-956-234-11

Sony Corporation
Audio Group

Published by Customer Relations and Service Group